Instruction Manual

16" Meade® Starfinder™ Dobsonian Telescope

Meade Instruments Corporation

WARNING

NEVER ATTEMPT TO OBSERVE THE SUN THROUGH YOUR MEADE TELESCOPE! OBSERVING THE SUN, EVEN FOR THE SHORTEST FRACTION OF A SECOND WILL CAUSE INSTANT AND IRREVERSIBLE EYE DAMAGE. WHEN OBSERVING DURING THE DAYTIME, DO NOT POINT THE TELESCOPE EVEN CLOSE TO THE SUN.

ALL MEADE TELESCOPES ARE UNDER CONTINUOUS TECHNICAL REVIEW, AND SPECIFICATIONS MAY BE CHANGED WITHOUT NOTICE. WE RESERVE THE RIGHT TO SHIP OUR LATEST MODELS.

Meade Instruments Corporation
6001 Oak Canyon
Irvine, CA 92618-5200
(949) 451-1450 FAX: (949) 451-1460

© 1999 All Rights Reserved.

® The name Meade and the Meade logo are trademarks registered with the United States Patent Office.

TABLE OF CONTENTS

A. Unpacking 5
B. Assembly and Set-up 5
1. Assembling the Mount 5
2. Optical Tube Assembly 6
C. Balancing the Telescope 7
D. Aligning the Viewfinder 8
E. Collimation of the Optical System 8
F. Tips On Using a Dobsonian Telescope 9
G. Magnifying Power 10
H. Seeing Conditions 10
I. Observing Guidelines 11
J. Care of Optics and Main Tube 11
K. Optional Accessories 12

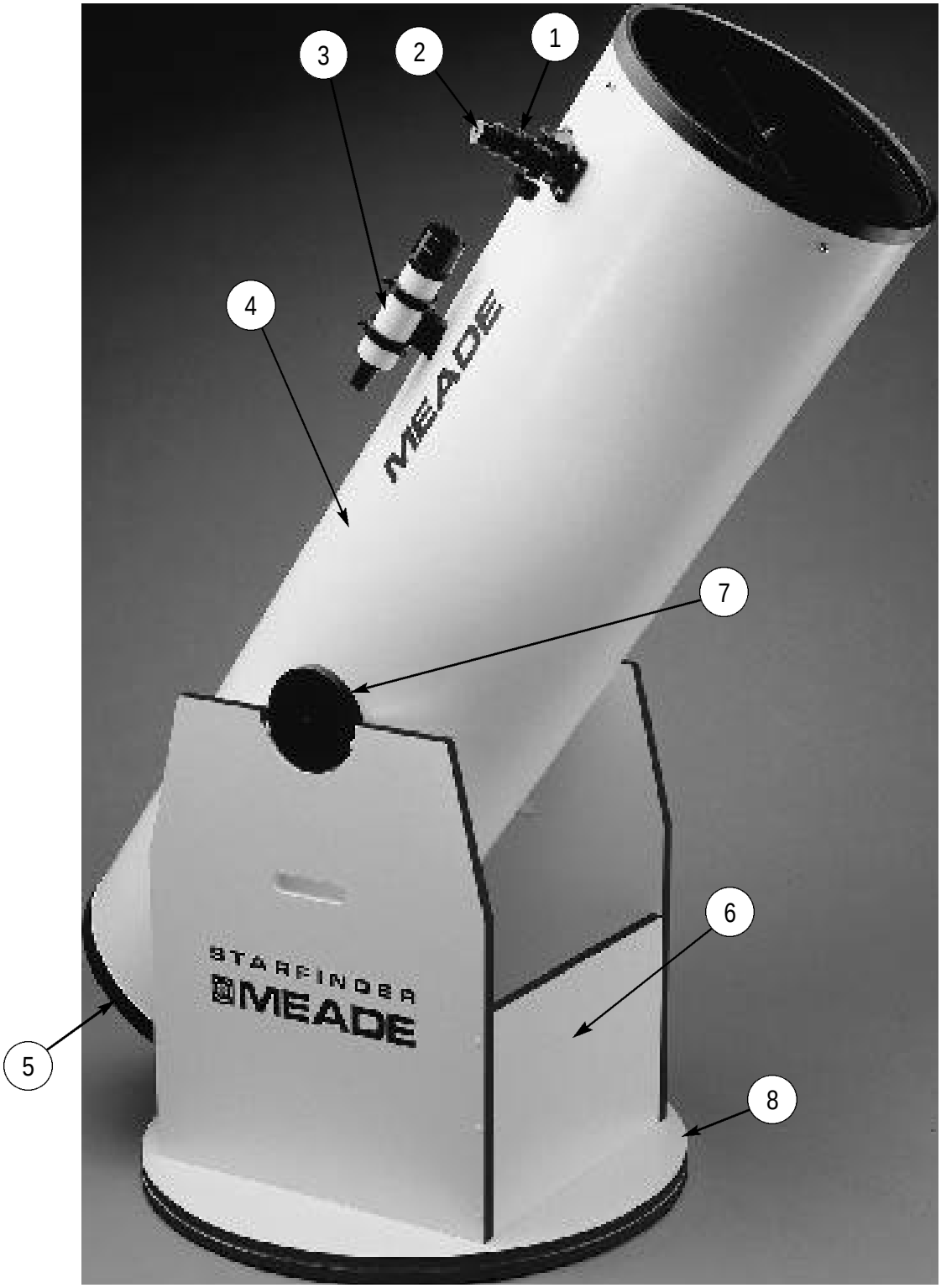

1. Focuser
2. Eyepiece
3. Viewfinder (Optional)
4. Optical Tube Assembly
5. Mirror Cell
6. Mount
7. Altitude Bearing
8. Azimuth Bearing

Figure 1

Congratulations on your purchase of the Meade Starfinder Dobsonian 16 Telescope! Your new instrument features the professional-quality optics of Meade Starfinder Reflectors, a precision rack-and-pinion focuser, high-quality mounting, and many other features generally found only on more expensive telescopes. The Meade Starfinder Dobsonian 16 is ideal for those just starting out in amateur astronomy, as well as the more serious visual observer.

In order to get the most enjoyment from your new telescope, please take a few minutes to read through this manual. We also suggest that you obtain some basic sky charts and books that will help you to learn your way around the sky and show you how to find interesting objects to observe. Soon you will be using your Meade Starfinder Dobsonian 16 to observe the Moon, planets, galaxies, star clusters, and nebulae; all in stunning high-resolution detail.

CAUTION: DO NOT OBSERVE THE SUN WITH YOUR MEADE TELESCOPE! Observation of the Sun will cause serious and irreversible eye damage. Under no condition should the observer point the telescope at or near the Sun or attempt to observe the Sun through the telescope.

A. UNPACKING

Your telescope has been carefully packed in three cartons as follows:

Carton #1: Optical tube assembly with the secondary mirror mounted on its housing attached; focuser; eyepiece (MA 25mm); related hardware.

Carton #2 The primary mirror mounted in its cell; hardware for the mirror cell.

Carton #3: Dobsonian Mount (unassembled); related hardware.

Remove and identify each part from the cartons, using Figure 1.

CAUTION: The primary mirror must be handled with extremely special care. Never touch its reflective surface or place the mirror where it could be damaged. Save all original packing materials; if it is ever necessary to ship the telescope, these materials will help to assure that no shipping damage will occur.

B. ASSEMBLY AND SET-UP

Assembly of your Meade Starfinder Dobsonian telescope should only take a few minutes, and require simple hand tools. A phillips screwdriver, pliers, and an adjustable wrench should be all that are required.

1. Assembling the Mount

Use the following steps to assemble the mount.

1. Attach nine self-adhesive Rubber Feet (1, Fig. 2) to the underside of the Ground Plate (2, Fig. 2), the round piece with the Teflon pads. Six of the Feet should be placed around the outside edge of the Ground Plate, evenly spaced, approximately 1/.2 inch from the edge. The remaining three feet should be placed in a triangle formation around the center hole, evenly spaced, approximately four inches from the center.

   Two extra Rubber Feet have been supplied for use as “bumpers” where the telescope tube hits the Front Board (3, Fig 2.) at the travel limits. Place one in the center of the top ledge, and one in the center on the inside near the bottom (see Fig. 2). The exact position for these two bumpers will be obvious with the telescope mounted on the base.

2. Attach the two Side Boards (4, Fig. 2) to the Front Board (3, Fig. 2), and the two Side Braces (14, Fig. 2) to the using the supplied Wood Screws (5, Fig. 2), through the pre-drilled holes. Do not fully tighten the screws yet.

3. Attach the Front Board/Side Board assembly to the Base Plate (6, Fig 2) using the supplied Wood Screws, through the predrilled holes. Snugly tighten all screws, including those previously installed. CAUTION: Do not overtighten the wood screws. However, the screws should be tightened sufficiently so that the head of the screw is flush with the wood surface.

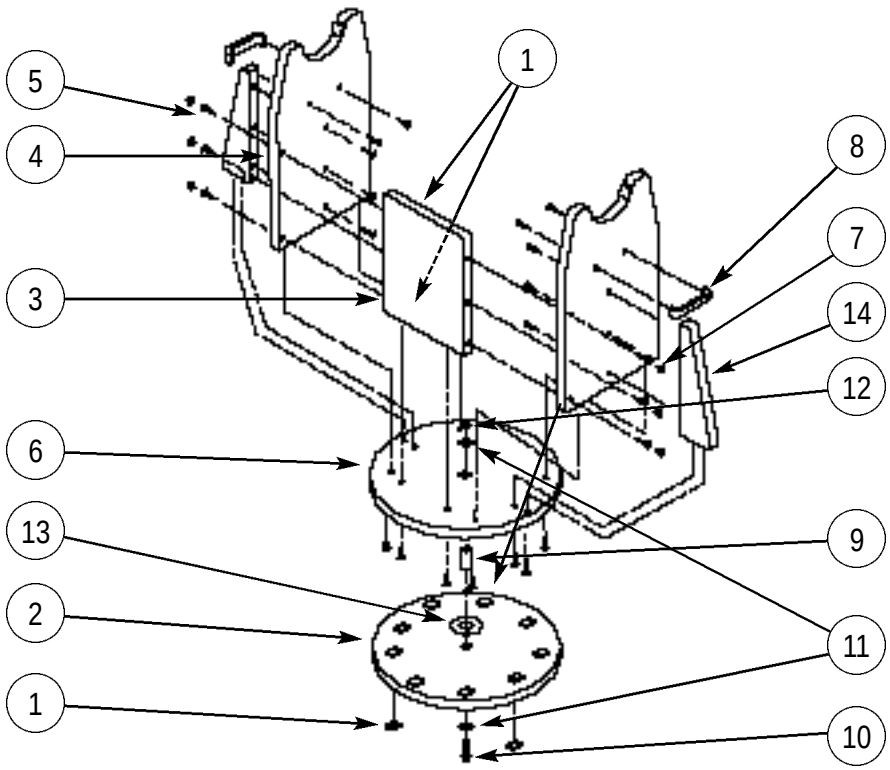

1. Rubber Feet . . . . . .Qty. 9
2. Ground Plate . . . . . .Qty. 1
3. Front Board . . . . . .Qty. 1
4. Side Boards . . . . . .Qty. 2
5. Wood Screws . . . . . .Qty. 22
6. Base Plate . . . . . .Qty. 1
7. Screw Cover Caps . . . . . .Qty. 6
8. Handles and Mounting Screws .Qty. 2
9. Center Bearing Bushing . . . . . .Qty. 1
10. 2 1/4" x 5/16" Hex Pivot Bolt . . .Qty. 1
11. Flat Washers . . . . . .Qty. 2
12. 5/16" Locking Nut . . . . . .Qty. 1
13. Nylon Washers . . . . . .Qty. 7
14. Side Brace . . . . . .Qty. 2

Figure 2

4. Firmly press the Screw Cover Caps (7, Fig. 2) into the heads of the wood screws on the Side Boards. You may have to lightly tap the Screw Cover Caps to properly seat them into the screw heads.
5. Install the two side Handles (8, Fig. 2) onto the Side Boards utilizing the supplied screws. Firmly tighten the two screws.
6. To install the center pivot bearing, first insert the Nylon Center Bearing Bushing (9, Fig. 2) into the center hole of the Ground Plate (2, Fig. 2) from the top side. You may have to lightly tap the Bushing to fully seat it into the hole. Place the seven nylon washers (13, Fig. 2) onto the Nylon Center Bearing Bushing. Then, from the bottom, insert the 2 1/4" x 5/16" Hex Pivot Bolt (10, Fig. 2), with a Flat Washer (11, Fig. 2) up through the center of the Ground Plate. This bolt should then be inserted through the center hole of the Base Plate (6, Fig. 2). Secure this assembly with the other Flat Washer and the 5/16" Locking Nut (12, Fig. 2). NOTE: Do not overtighten the nut or the Base Plate will not easily rotate upon the Ground Plate. Only tighten the Pivot Bolt and Nut sufficiently to maintain a very light pressure between the Ground Plate and Base Plate. The two parts should easily turn in a “Lazy Susan” fashion.

This completes assembly of your Meade Starfinder Dobsonian Mount.

2. Optical Tube Assembly

The following steps should be used to assemble the Optical Tube Assembly:

1. The optical tube has been pre-drilled at the Meade factory to accept all standard accessories. Lay the tube flat on a floor and attach the focuser (1, Fig. 1) as shown, using the supplied hardware. Do not over tighten; a firm feel is sufficient.

2. If you have purchased one of the optional Viewfinders (3, Fig 1), attach it as shown using the supplied hardware. As with the focuser, a firm feel is sufficient. Overtightening may result in damage to the tube's finish.

Your Meade Starfinder telescope was fully assembled, aligned, and tested at the Meade factory. To ensure safe shipping, the primary mirror was then removed from the telescope. Locate the primary mirror cell assembly (see Fig 1). Again, take extreme care not to touch or bump the primary mirror.

To install the primary mirror, follow these steps:

3. You will note that there is a colored marker on the rear of the telescope tube. There is a corresponding colored marker on the mirror cell. Carefully slide the mirror cell into the rear of the tube, ensuring that the two colored markers line up. Secure the cell to the tube with the hardware provided. Again, do not overtighten the screws. A firm feel is sufficient.
4. Carefully place the assembled optical tube into the previously assembled base as illustrated in Figure 1. Note that the two large bearings on the side of the tube cradle into the cutouts of the mount. Also note the orientation of the tube to the mount; the focuser should be on the opposite side from the mount's Front Board.

C. BALANCING THE TELESCOPE

Dobsonian telescopes are designed to move easily, but at the same time remain in the position they are placed. This is achieved by carefully balancing the telescope at the Meade factory. The telescope is balanced for standard accessories.

However, should anything attached to the telescope change, for example using a larger or smaller eyepiece, using a viewfinder, or even moving the primary mirror during collimation, slight imperfections in balance may occur.

If you find that as you change eyepieces or accessories an out-of-balance condition causes annoyance, this is relatively easy to solve. Meade offers an optional counterweight set which attaches to the mirror cell using the counterweight thread. Or, with a little ingenuity, counterweights can be fashioned by the telescope owner, using fishing sinkers or washers.

D. ALIGNING THE VIEWFINDER (optional accessory)

The viewfinder will require alignment, or collimation, with the main telescope, in order that the viewfinder and the main telescope are parallel and point to the same position.

1. Insert the 25mm eyepiece and focus the main telescope on a convenient land target by turning the focuser pinion knobs. This target should be a well-defined, specific point (*e.g.* the top of a telephone pole or the corner of a building) at least 200 yards distant.
2. Center the selected target in the main telescope's field of view.
3. Tighten or loosen, as appropriate, the viewfinder's collimation thumb screws (there are six of these screws located on the viewfinder bracket rings) until the crosshairs of the viewfinder are precisely centered on the object already centered in the main telescope.

With this collimation accomplished, objects located first in the wide-field viewfinder will then be centered in the main telescope's field of view.

E. COLLIMATION OF THE OPTICAL SYSTEM

Precise collimation, or alignment, of your telescope's optical system is essential for good performance. All Meade telescopes are accurately collimated at the factory prior to shipment, so collimation adjustments will probably not be necessary. Nevertheless, take the time now to familiarize yourself with the following collimation procedure so that you may recognize a properly collimated instrument and adjust the collimation yourself, if necessary:

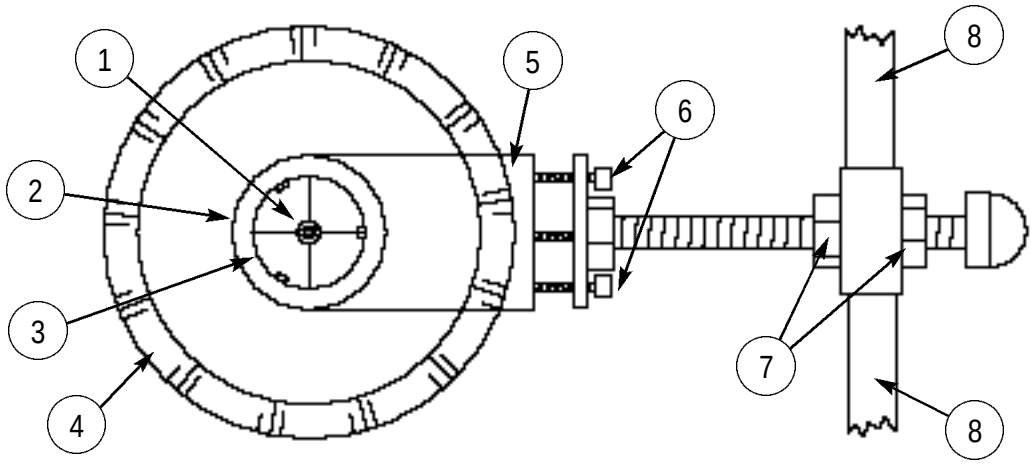

1. Reflection of eye
2. Diagonal mirror
3. Reflection of primary mirror
4. Focuser drawtube
5. Secondary mirror holder
6. Tilt screws
7. Lock nuts
8. Spider vanes

Figure 3

1. Remove the eyepiece from the focuser and look directly at the diagonal mirror located inside the upper end of the optical tube. Within its reflection you will see the main mirror, a reflection of the diagonal mirror, and your eye, each centered within each other, and with respect to the bottom edge of the focuser drawtube. (Refer to Figure .)

2. If the diagonal mirror is <u>not</u> centered within the circle formed by the bottom edge of the focuser drawtube, rotate the diagonal mirror holder about its support bolt. When the mirror is centered, tighten the lock nuts (7, Fig. 3) on the long bolt against the central hub of the 4-vane system.
3. If the reflection of the main mirror is not centered on the surface of the diagonal mirror, adjust the 3 tilt screws (6, Fig. 3) on the back of the diagonal mirror holder to achieve correct centering.
4. You will notice three socket headed bolts on the bottom end of the telescope (5, Fig. 1) (These will be wing nuts on the 16-inch model). These are used to adjust the alignment of the primary mirror. They should never be removed completely. Also, when adjusting these collimation screws, go slowly. Just a small movement of a primary adjusting screw can make a big difference in mirror alignment.
5. If the reflection of your eye is not centered within the reflection of the primary mirror, adjust the three collimation screws. Proceed by “trial and error” until you develop a feel for which screw to turn in order to change the image in any given way.
6. For final adjustments, perform a test using an actual star to confirm the accuracy of Steps 1 through 5, above. Using the 25mm eyepiece, point the telescope at a moderately bright (second or third magnitude) star, and center the image in the telescope’s field of view.

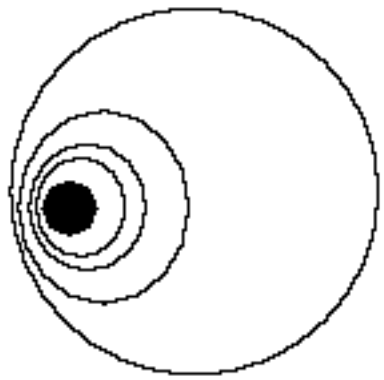

Figure 4A

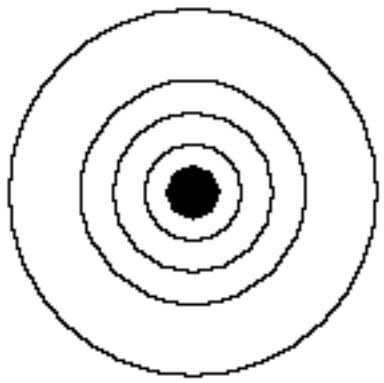

Figure 4B

7. Bring the star’s image slowly in and out of focus until you see several circles (“diffraction rings”) surrounding the star’s central disk. If Step 5 was done accurately, you will see concentric circles as in Figure 4B. An improperly collimated instrument will reveal oblong or elongated circles as in Figure 4A. Slowly adjust the three collimation screws on the mirror cell until the circles are concentric on either side of focus.

F. TIPS ON USING A DOBSONIAN TELESCOPE

1. Never lubricate the Teflon pads on the Ground Plate and Side Bearing Cradle, or the Side Bearings themselves. The Meade Starfinder Dobsonian has been designed with some inherent friction. You want the telescope to move easily when you position it, but you also want it to stay in place when you don’t. Using any kind of oil, silicone spray, wax, or grease will ruin the performance by causing the telescope to move too easily. Just keep these bearing surfaces clean; that’s all the maintenance required.
2. You will notice that your telescope will move in altitude by raising and lowering the tube, and in azimuth by rotating the base. As you observe objects in the night sky they will appear to drift out of the field of view due to the Earth’s rotation. To keep an object centered in the field of view, just lightly nudge the telescope in the proper direction. This may take a little practice at first, but you’ll soon get the hang of it.

3. Be sure the Mount is placed on a relatively level surface to allow proper operation. The feet should be in firm contact and not wobble. If you are in an area with particularly rough or soft ground, it may be helpful to place the Mount on a thick piece of plywood.
4. Part of the fun of using a Dobsonian type of telescope is the challenge of hunting for objects in the night sky. Invest is some simple star charts and books that tell you how to locate objects using a technique called “star hopping.” Once you begin learning the star patterns and constellations, you’re well on you way to finding many amazing sights.

G. MAGNIFYING POWER

The operating magnification of the telescope is a function of two distinct optical characteristics: the focal length of the telescope and the focal length of the eyepiece in use. For example, using the 25mm eyepiece with the Starfinder Dobsonian 16 yields 73X, computed as follows:

$$\frac{\text{1828mm (focal length of the telescope)}}{\text{25mm (focal length of the eyepiece)}} = 73X$$

The type of eyepiece, whether Modified Achromatic, Plössl, or Super Plössl, has no effect on magnification, but does have a bearing on such optical characteristics as field of view, flatness of field, and color correction.

Maximum practical magnification is about 50X per inch of aperture. Generally, however, lower powers will produce higher image resolution. When unsteady air conditions prevail (as witnessed by rapid “twinkling” of the stars), extremely high powers result in “empty” magnification, where the object detail observed is actually diminished by the excessive power.

When beginning observations on a particular object, start with a low power eyepiece; get the object well-centered in the field of view and sharply focused. Then try the next step up in magnification. If the image starts to become fuzzy as you work up into higher magnifications, then back down to a lower power: the atmospheric steadiness is not sufficient to support high powers at the time you are observing. Keep in mind that a bright, clearly resolved, but smaller, image will show far more detail than a dimmer, poorly resolved, larger image.

Because of certain characteristics of the human eye (in particular, eye pupil diameter) and because of optical considerations inherent in the design of the telescope, there exist minimum practical power levels also. Generally speaking the lowest usable power is approximately 4X per inch of telescope aperture.

H. SEEING CONDITIONS

Even in normal city conditions, with all of the related air and light pollution, there are many interesting celestial objects to observe. But, to be sure, there is no substitute for the clear, dark, steady skies generally found only away from urban environments, or on mountaintops: objects previously viewed only in the city take on added detail or are seen in wider extension, or even become visible at all for the first time.

The amateur astronomer is faced typically with two broadly defined problems when viewing astronomical objects through the Earth’s atmosphere: first is the clarity, or transparency, of the air, and secondly the steadiness of the air. This latter characteristic is often referred to as the quality of “seeing.” Amateur astronomers talk almost constantly about the “seeing conditions,” since, perhaps ironically, even the clearest, darkest skies may be almost worthless for serious observations if the air is not steady. This steadiness of the atmosphere is most readily gauged by observing the “twinkling” of the stars: rapid twinkling implies air motion in the Earth’s atmosphere, and under these conditions, resolution of fine detail (on the surface of Jupiter, for instance) will generally be limited. When the air is steady, stars appear to the naked eye as untwinkling points of unchanging brightness, and it is in such a situation that the full potential of the telescope may be realized: higher powers may be used to advantage, closer double stars resolved as distinct points, and fine detail observed on the Moon and planets.

I. OBSERVING GUIDELINES

Several basic guidelines should be followed for best results in using your telescope:

1. Try not to touch the eyepiece while observing. Any vibrations resulting from such contact will immediately cause the image to move.
2. Allow your eyes to become “dark-adapted” prior to making serious observations. Night adaptation generally requires about 10-15 minutes for most people.
3. Let the telescope “cool down” to the outside environmental temperature before making observations. Temperature differentials between a warm house and cold outside air require about 30 minutes for the telescope’s optics to regain their true correct figures. During this period the telescope will not perform well.
4. If you wear glasses and do not suffer from astigmatism, take your glasses off when observing through the telescope. You can re-focus the image to suit your own eyes. Observers with astigmatism, however, should keep their glasses on, especially with lower powered eyepieces. The effects of astigmatism are reduced with higher power eyepieces, so eyeglasses may be removed to improve eye relief.
5. Avoid setting up the telescope inside a room and observing through an open window (or, worse yet, through a closed window!). The air currents caused by inside/outside temperature differences will make quality observing impossible.
6. Perhaps most importantly of all, avoid “overpowering” your telescope. The maximum usable magnification at any given time is governed by the seeing conditions. If the telescopic image starts to become fuzzy as you increase in power, drop down to a reduced magnification. A smaller, but brighter and sharper, image is far more preferable to a larger, but fuzzy, indistinct one.

As you use your telescope more and more, you will find that you are seeing more and finer detail: observing through a large-aperture telescope is an acquired skill. Celestial observing will become increasingly rewarding as your eye becomes better trained to the detection of subtle nuances of resolution.

J. CARE OF OPTICS AND MAIN TUBE

With the reasonable care due any fine instrument, your Meade telescope will last a lifetime. If the eyepieces become dirty, try cleaning them with a camel’s hair brush or compressed air. If you must wipe the surface of the lenses, do so gently with a soft cloth so as not to scratch the protective coatings.

The aluminum coating on the primary and secondary mirrors may last more than ten years without significant deterioration. (The coatings will last a shorter period if regularly exposed to salty or polluted air.) Minor blemishes, scratches, or streaks will NOT impair the telescope’s performance. Re-coating, when necessary, is relatively inexpensive. Contact your local Meade dealer for information on mirror re-coating services.

<u>The most common error is to clean the optics too often.</u> If cleaning does become necessary, clean as follows:

1. Using distilled water and cotton, gently swab the surface of the mirror to remove any dust or dirt. Use the cotton to make one pass over the mirror and then use new cotton. This will keep the dirt previously removed from contacting the mirror surface and scratching the coatings.
2. Dip a wad of cotton in a mild detergent solution (1/2 teaspoon to 1 pint of water) and <u>gently</u> swab the entire surface. This will remove any oily deposits or fingerprints.
3. Swab the entire surface. Do not turn over the cotton wads or dissolved skin oils may deposit on the mirror’s surface. Immediately take a dry swab and continue wiping the entire surface gently. Keep changing wads until the mirror surface is completely dry and free of streaks.

When cleaning the outside of the Starfinder optical tube (1), use a mild detergent, (Pine-Sol, Formula 409, Fantastic, or oil soap). Oil soap is preferred as it also acts as a preservative for the paint. Solvent or alcohol-based cleaning solutions will diminish the original luster of the paint.

K. OPTIONAL ACCESSORIES

For details on the following optional accessories, see your Meade dealer, or the Meade Instruments General Catalog.

Viewfinders: Your Meade Starfinder Dobsonian is pre-drilled and ready to install either the Meade #637 6x30mm or the #545 8x50mm Viewfinder. These small, low-power telescopes have “crosshairs” which greatly assist in pointing the main telescope.

Eyepieces: Many additional eyepieces are available for higher and lower magnifications. All Meade reflecting telescopes accept standard 1.25" O.D. eyepieces.

Telenegative Amplifier: The Telenegative Amplifier, or Barlow Lens, is a convenient accessory used to increase the effective magnification of any given eyepiece. The Telenegative Amplifier is inserted into the focuser and accepts all standard 1.25" O.D. eyepieces. It is available in either 2X power or 2X-3X variable power.

Filters: Thirteen color filters are available for significantly increased contrast and resolution of detail on the Moon and planets. For example, the #80A(blue) filter effectively enhances the reddish-colored detail on the surface of Jupiter. Also useful are the Series 4000 Nebular filters which assist in blocking out many forms of light pollution and tend to increase the contrast of nebulae. These filters thread into the barrels of all standard 1.25" O.D. eyepieces.

Dust Covers: Snug-fitting vinyl dust covers protect optics from outside dust during storage of the telescope.

Counterweights: This set of three counterweights thread onto the mirror cell to allow for balancing optional accessories.

NOTES

NOTES

Meade Instruments Corporation
6001 OAK CANYON, IRVINE, CALIFORNIA 92618-5200 U.S.A.
(949) 451-1450 FAX: (949) 451-1460 *www.meade.com*

Ver. 0899 Part no. 14-0218-16